1) **(10 points) Sketch the region bounded by the curves $y = x^2 + 3x - 6$ and $y = 2x$, and find the area.**

$x^2+3x-6=2x$

$x^2+x-6=0$

$(x+3)(x-2)=0$

$x=-3,2$

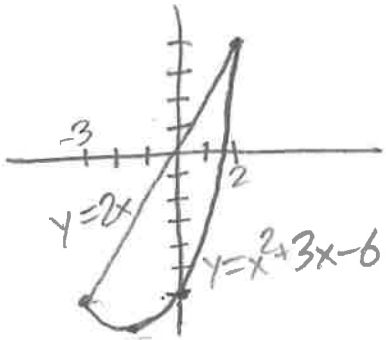

$$A=\int_{-3}^{2}\left[2x-(x^2+3x-6)\right]dx$$

$$=\int_{-3}^{2}(-x^2-x+6)\,dx$$

$$=-\frac{1}{3}x^3-\frac{1}{2}x^2+6x\Big|_{-3}^{2}$$

$$=-\frac{8}{3}-2+12-\left(9-\frac{9}{2}-18\right)$$

$$=-\frac{8}{3}+10-9+\frac{9}{2}+18$$

$$=-\frac{8}{3}+19+\frac{9}{2}$$

$$=\frac{-16+114+27}{6}$$

$$=\boxed{\frac{125}{6}}$$

2) (15 points) Use the washer method to find the volume of the solid obtained by revolving the region bounded by the curves $x = 2y^2$ and $x = 4y$ about the y-axis.

$2y^2 = 4y$

$2y^2 - 4y = 0$

$2y(y-2) = 0$

$y = 0, 2$

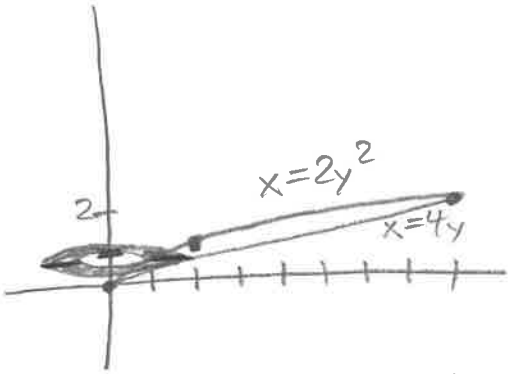

(Don't have to draw picture.)

For each $y \in [0,2]$:

inner radius $= 2y^2$

outer radius $= 4y$

$$V = \pi \int_0^2 \left[(4y)^2 - (2y^2)^2\right] dy$$

$$= \pi \int_0^2 (16y^2 - 4y^4)\, dy$$

$$= \pi \left(\frac{16}{3}y^3 - \frac{4}{5}y^5\right)\Big|_0^2$$

$$= \pi\left(\frac{128}{3} - \frac{128}{5} - (0-0)\right)$$

$$= 128\pi\left(\frac{1}{3} - \frac{1}{5}\right)$$

$$= 128\pi\left(\frac{5-3}{15}\right)$$

$$= \boxed{\frac{256\pi}{15}}$$

3) (15 points) Use the cylindrical shells method to find the volume of the solid obtained by revolving the region bounded by the curves $y = \sqrt{x}$, $y = 0$, and $x = 4$ about the line $x = -1$.

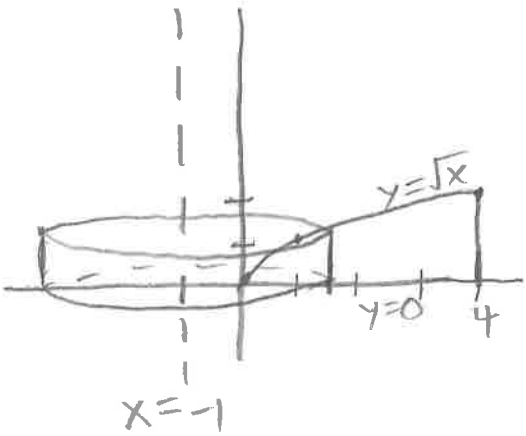

For each $x \in [0,4]$:

radius $= x+1$

height $= \sqrt{x}$

(Don't have to draw picture)

$$V = 2\pi \int_0^4 (x+1)\sqrt{x}\,dx$$

$$= 2\pi \int_0^4 \left(x^{3/2} + \sqrt{x}\right) dx$$

$$= 2\pi \left(\frac{2}{5}x^{5/2} + \frac{2}{3}x^{3/2}\right)\Big|_0^4$$

$$= 2\pi \left[\frac{2}{5}(32) + \frac{2}{3}(8) - (0+0)\right]$$

$$= 2\pi \left(\frac{64}{5} + \frac{16}{3}\right)$$

$$= 2\pi \left(\frac{192+80}{15}\right)$$

$$= 2\pi \left(\frac{272}{15}\right)$$

$$= \boxed{\frac{544\pi}{15}}$$

4) **(10 points) Find the average value of the function $f(x) = x^2\sqrt{2x^3+9}$ on the interval $[0, 2]$.**

$$f_{avg} = \frac{1}{2-0}\int_0^2 x^2\sqrt{2x^3+9}\,dx$$

$$= \frac{1}{2}\int_0^2 x^2\sqrt{2x^3+9}\,dx$$

$$u = 2x^3+9$$

$$du = 6x^2\,dx$$

$$= \frac{1}{12}\int_9^{25}\sqrt{u}\,du$$

$$= \frac{1}{12}\cdot\frac{2}{3}u^{3/2}\Big|_9^{25}$$

$$= \frac{1}{18}(125-27)$$

$$= \frac{1}{18}(98)$$

$$= \boxed{\frac{49}{9}} \text{ or } \frac{98}{18}$$

5) (20 points) Evaluate the following integrals.

(a) $\int e^{4x} \cos 2x \, dx$

$u = e^{4x}$ $\quad dv = \cos 2x\,dx$

$du = 4e^{4x}dx$ $\quad v = \frac{1}{2}\sin 2x$

$$\int e^{4x}\cos 2x\,dx = \frac{1}{2}e^{4x}\sin 2x - \int 2e^{4x}\sin 2x\,dx$$

$u = 2e^{4x}$ $\quad dv = \sin 2x\,dx$

$du = 8e^{4x}dx$ $\quad v = -\frac{1}{2}\cos 2x$

$$= \frac{1}{2}e^{4x}\sin 2x - \left[-e^{4x}\cos 2x + 4\int e^{4x}\cos 2x\,dx\right]$$

$$= \frac{1}{2}e^{4x}\sin 2x + e^{4x}\cos 2x - 4\int e^{4x}\cos 2x\,dx$$

$$5\int e^{4x}\cos 2x\,dx = \frac{1}{2}e^{4x}\sin 2x + e^{4x}\cos 2x$$

$$\int e^{4x}\cos 2x\,dx = \boxed{\frac{1}{10}e^{4x}\sin 2x + \frac{1}{5}e^{4x}\cos 2x + C}$$

(b) $\int x^2 e^{-x}\, dx$

$u = x^2$ $\quad dv = e^{-x}dx$

$du = 2x\,dx$ $\quad v = -e^{-x}$

$$\int x^2 e^{-x}dx = -x^2e^{-x} + \int 2xe^{-x}dx$$

$u = 2x$ $\quad dv = e^{-x}dx$

$du = 2dx$ $\quad v = -e^{-x}$

$$= -x^2e^{-x} - 2xe^{-x} + \int 2e^{-x}dx$$

$$= \boxed{-x^2e^{-x} - 2xe^{-x} - 2e^{-x} + C}$$

6) **(20 points) Evaluate the following integrals.**

(a) $\int \sec^5 2x \tan^3 2x \, dx = \int \sec^4 2x(\sec^2 2x - 1)\sec 2x \tan 2x \, dx$

$u = \sec 2x$

$du = 2\sec 2x \tan 2x \, dx$

$= \frac{1}{2}\int u^4(u^2-1)\,du$

$= \frac{1}{2}\int (u^6 - u^4)\,du$

$= \frac{1}{14}u^7 - \frac{1}{10}u^5 + C$

$= \boxed{\frac{1}{14}\sec^7 2x - \frac{1}{10}\sec^5 2x + C}$

(b) $\int \frac{x^5}{\sqrt{4-x^2}}\,dx$

$x = 2\sin\theta$

$dx = 2\cos\theta \, d\theta$

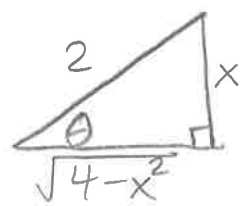

$= \int \frac{32\sin^5\theta}{2\cos\theta} 2\cos\theta \, d\theta$

$= \int 32\sin^5\theta \, d\theta$

$= 32\int (1-\cos^2\theta)^2 \sin\theta \, d\theta$

$u = \cos\theta$

$du = -\sin\theta \, d\theta$

$= -32\int (1-u^2)^2 \, du$

$= -32\int (1 - 2u^2 + u^4)\,du$

$= -32\left(u - \frac{2}{3}u^3 + \frac{1}{5}u^5\right) + C$

$= -32\left(\cos\theta - \frac{2}{3}\cos^3\theta + \frac{1}{5}\cos^5\theta\right) + C$

$= \boxed{-32\left(\frac{\sqrt{4-x^2}}{2}\right) + \frac{64}{3}\left(\frac{\sqrt{4-x^2}}{2}\right)^3 - \frac{32}{5}\left(\frac{\sqrt{4-x^2}}{2}\right)^5 + C}$

Okay to leave 32 or -32 factored in front

$= -16\sqrt{4-x^2} + \frac{8}{3}(4-x^2)^{3/2} - \frac{1}{5}(4-x^2)^{5/2} + C$

7) (20 points) Evaluate the following integrals.

(a) $\int \frac{5x^2-7x-2}{(x+1)^2(x-4)}\,dx = \int \left[\frac{A}{x+1} + \frac{B}{(x+1)^2} + \frac{C}{x-4}\right]dx$

$A(x+1)(x-4)+B(x-4)+C(x+1)^2 = 5x^2-7x-2$

$x=-1: \ -5B=10 \Rightarrow B=-2$

$x=4: \ 25C=50 \Rightarrow C=2$

$x=0: \ -4A-4B+C=-2 \Rightarrow -4A+8+2=-2$

$-4A=-12 \Rightarrow A=3$

$= \int \left[\frac{3}{x+1} - \frac{2}{(x+1)^2} + \frac{2}{x-4}\right]dx$

$= \boxed{3\ln|x+1| + \frac{2}{x+1} + 2\ln|x-4| + C}$

(b) $\int \frac{6x^2-2x+21}{(x-1)(x^2+4)}\,dx = \int \left[\frac{A}{x-1} + \frac{Bx+C}{x^2+4}\right]dx$

$A(x^2+4)+(Bx+C)(x-1) = 6x^2-2x+21$

$x=1: \ 5A=25 \Rightarrow A=5$

$x=0: \ 4A-C=21 \Rightarrow 20-C=21 \Rightarrow C=-1$

$x=-1: \ 5A+2B-2C=29 \Rightarrow 25+2B+2=29$

$2B=2$

$B=1$

$= \int \left[\frac{5}{x-1} + \frac{x-1}{x^2+4}\right]dx$

$= \int \left[\frac{5}{x-1} + \frac{x}{x^2+4} - \frac{1}{x^2+4}\right]dx$

$= \boxed{5\ln|x-1| + \frac{1}{2}\ln|x^2+4| - \frac{1}{2}\tan^{-1}\left(\frac{x}{2}\right) + C}$

absolute value not needed since $x^2+4>0$